IKON®
FOR BETTER LIVING

RANGEHOOD BROCHURE

Unclutter your kitchen with simple lines. Our effortless range of extraction hoods offer reliability and functionality without compromising performance.

2018 COLLECTION

KITCHEN/LAUNDRY SINKS

BATHROOM BASINS

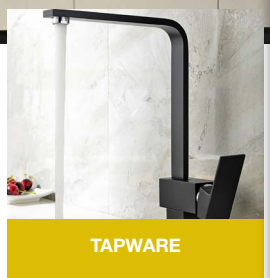

TAPWARE

RANGEHOODS

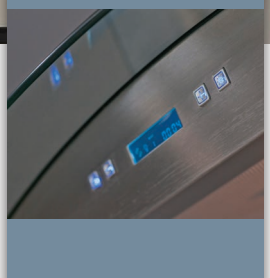

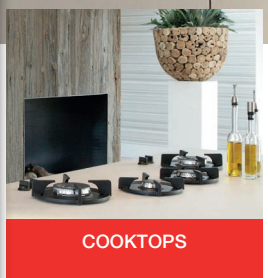

COOKTOPS

WASTE DISPOSALS

What you need to know:

Extraction

Our ratings are measured in a nett capacity - that means that it is measured with the motor running in the rangehood with 1m of ducting, not like other premium brands who advertise a high extraction but measure based solely on the performance of the motor outside of the rangehood. This rate changes significantly once it is installed and ducting is used.

DB Rating

With DB ratings you need to consider how these are measured, some are measured based on what noise the motor produces only, some are measured and marketed at the lower speed to make their noise rating low. To be sure you're getting the best product for your needs, test before purchasing; turn them on and listen!

Ask a professional if you are not sure.
For more information about what has been discussed and for further information, visit our virtual showroom: www.ikon.nz

CONTENTS

FLOW-IN INDUCTION HOB & EXTRACTION *PAGE 4*

WALL UNITS *PAGE 6*

SLIDE OUT *PAGE 6*

POWER PACKS *PAGE 9*

DOWN DRAFTS *PAGE 13*

DOWN DRAFTS - FOR REMOTE MOTORS *PAGE 15*

CEILING UNITS *PAGE17*

REMOTE MOTORS *PAGE 20*

DUCTING KITS & NABER DUCTING *PAGE 21*

GENERAL INFORMATION *PAGE 23*

DID YOU KNOW?

CHOOSING THE CORRECT AIRFLOW POWER

The airflow power required normally depends on the size of kitchen and type of cooking. The correct airflow for your specific kitchen can be easily worked out. Simply multiply the volume of the kitchen by ten and you will obtain the ideal airflow for that room.

For example, for a kitchen of 3m x 4m with a height of 2.7m:
(3 x 4 x 2.7) x 10 = 324. In this case, any Ikon cooker hood with airflow equal to our superior to 324 m3/h will therefore guarantee the complete and efficient ventilation of the room.

For a large family, for those who love cooking as an art, or where a group of friends are gathered together in a spacious kitchen to experiment with some exotic recipes, the hood capacity should be over 500 m3/h. Effective capture of cooking fumes also depends on the correct use of the product.

CHOOSING THE RIGHT VERSION

All Ikon models are designed to work both in the duct-out version, where air is captured and expelled to the outside, or the recycling version, where air is captured, purified through filters and sent back into the kitchen environment.

Both versions guarantee efficient cleansing of the air in the kitchen, but differ in terms of installation and maintenance, The duct-out version must be connected to the outside through ducting that carries all the captured air from the house.

This requires piping with a sufficiently large diameter at least 125mm (though 150mm is preferred). The piping must also not be too long or tortuous, otherwise the aerodynamic resistance of the passage can cause “power loss”, that is cubic metres of lost airflow. Piping is not required in the recycling version, since the captured air is purified through the hood’s active carbon filters and then returned to the internal environment. In this version it is extremely important to observe correct maintenance of the odour filters, and also replace them when necessary.

AIR FILTRATION

There are two distinct types of air filtration in a rangehood.

The first consists of the grease filter, which is always present in the hood and placed at the entrance of the product. The grease filter’s purpose is to protect the interior of the product, filtering the heaviest grease particles from the air. These filters can be of different types of material: synthetic (to be replaced cyclically) or aluminium (washable), which can easily be removed from the hood and washed either by hand with liquid soap or in the dishwasher. The second type of filter, the activated charcoal filter, is present only in recirculating range hoods. Their purpose is to cleanse the air captured by the cooker hood. The traditional solution consists of a suitably shaped plastic container holding granules of active carbon. This special carbon is able to capture and store grease, humidity and odours. These filters, due to the active carbon, must in general be replaced every 3-4 months.

Introducing the new

Flow-in induction hob and extractor

CENTRE EXTRACTION PIECE COMES IN EITHER STAINLESS OR BLACK*

USE THIS ENTIRE SIDE AS ONE LARGE COOKING ZONE OR SEPARATELY FOR MULTIPLE POTS!

ANOTHER INNOVATIVE PRODUCT FROM IKON!

Four speed
Four zones
Surface induction
Touchscreen
Timer function for all elements
Cleaning indicator
Stainless steel filters
Integrated flow-in extraction

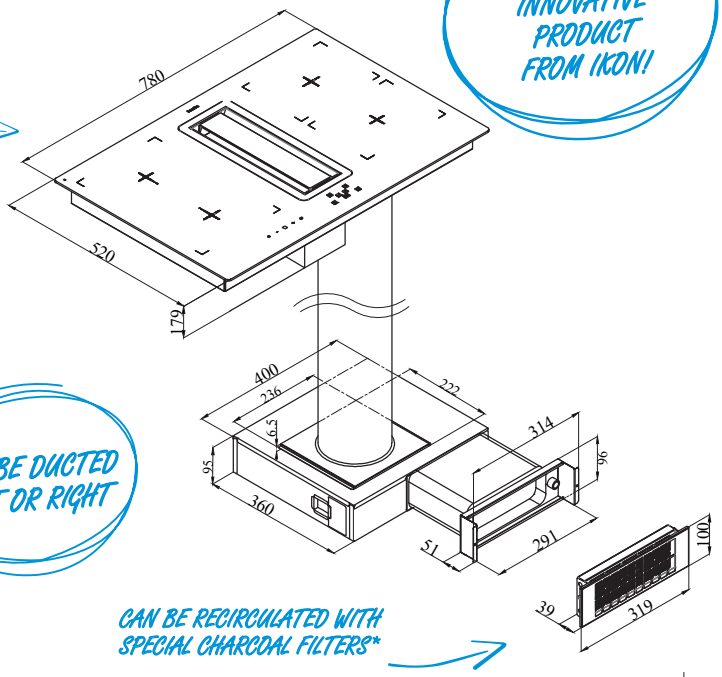

CAN BE DUCTED LEFT OR RIGHT

CAN BE RECIRCULATED WITH SPECIAL CHARCOAL FILTERS*

- Easy-clean induction cooktop
- Horizontal touch control, LED display
- Safety lock
- 9 power levels
- Bridge function for left front and rear zones
- 4 timers simultaneously usable
- Auto adapt (heating area adapts itself to the pot)
- Auto-stop (in case of inadvertent start, long absence, over heating)
- 4 Residual heat indicators (2 super boosters)
- Front left heating zone 210 x 177mm 1400/2000W (booster)
- Rear left heating zone 210 x 177mm 1400W (booster)
- Rear right heating zone 210 x 177mm 2300/3000W (booster)
- Front right heating zone 210 x 177mm 1400W (booster)

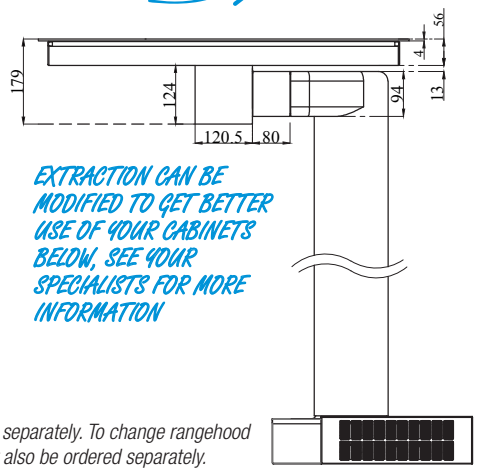

EXTRACTION CAN BE MODIFIED TO GET BETTER USE OF YOUR CABINETS BELOW, SEE YOUR SPECIALISTS FOR MORE INFORMATION

ACCESSORIES AVAILABLE:

*Recirculation kit must be ordered separately. To change rangehood panel to glass from stainless must also be ordered separately.

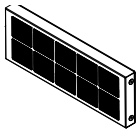

Filter (one)
YM974.3413.04

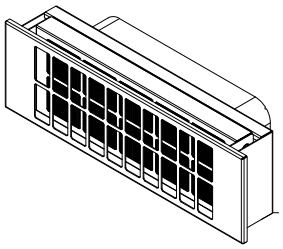

Recirculating vent
YM974.3413.03

flawless integration of the induction hob and hood

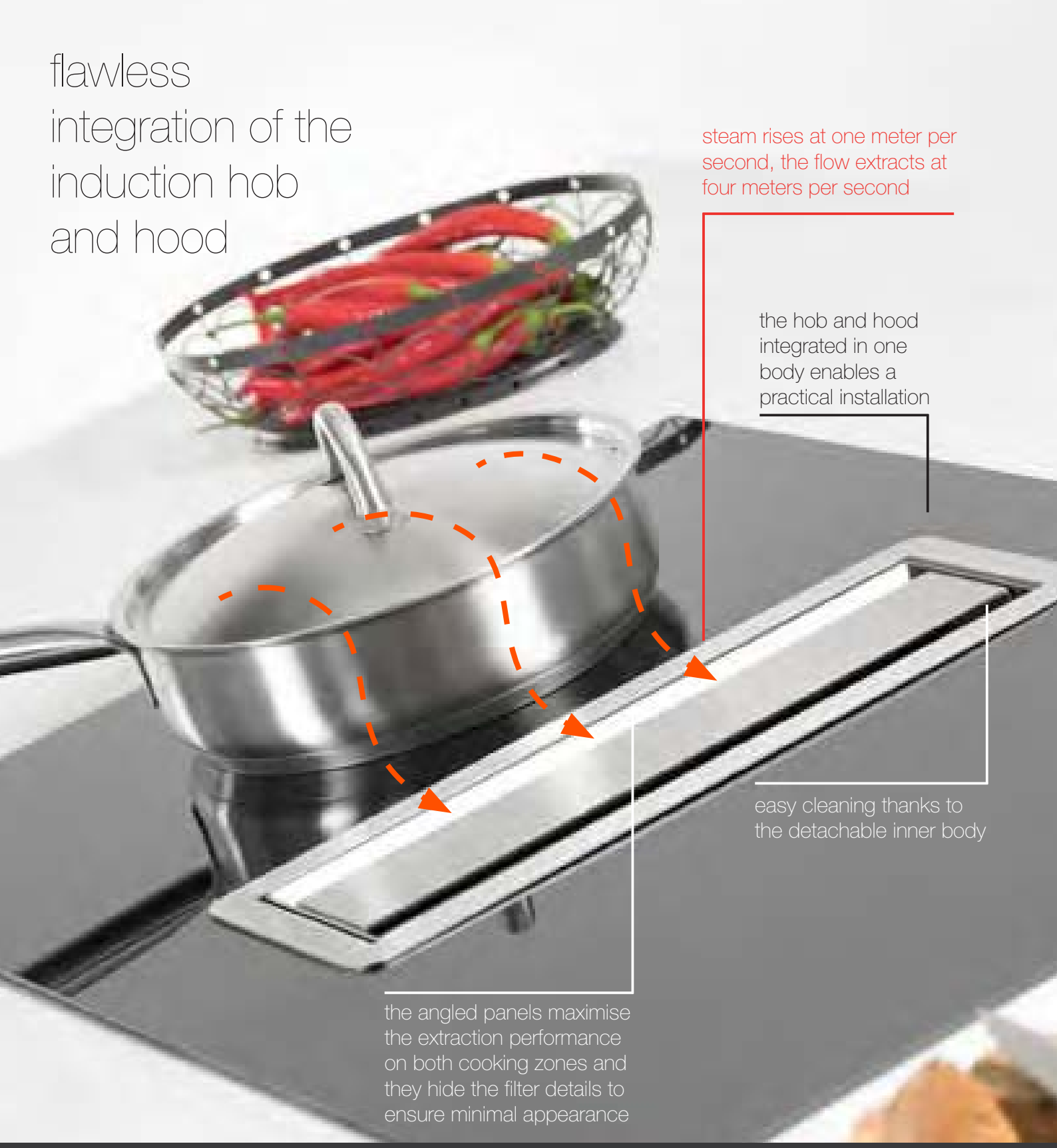

Integrated extraction

Hi-performance extraction system quickly removes the fumes from your cooking surface

WALL UNITS

THESE RANGEHOODS TELL YOU WHEN TO CLEAN THEM

***Extension flues are available on these models*

MODEL: IK52

COLOUR: Stainless Steel

NET CAPACITY: Up to 800m3/hr

CODE: 12120.6 - 60cm
12120.9 - 90cm

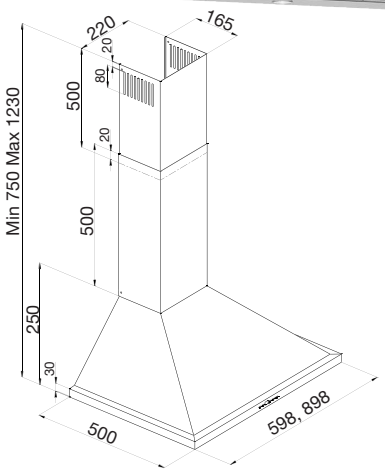

SIZE (mm)	600mm - 598W x 500D 900mm - 898W x 500D
HEIGHT (mm)	750 min - 1230 max
ELECTRICITY SUPPLY & CONNECTION	220-240v, 50Hz
CONTROLS	Soft touch control
SPEEDS	Five
ILLUMINATION	Two 3 Watt LEDs
SUPPLIED	Instructions for installation, operation and maintenance, screws & brackets for mounting.
NOISE RATING	54-63 dBA
WATTAGE (W)	250W
DUCTING	150mm ducting required. Can be recirculated using charcoal filters
FEATURES	Timer function Dishwasher safe aluminium filters N-RV system

MODEL: IK71

COLOUR: Stainless Steel

NET CAPACITY: Up to 800m3/hr

CODE: 13173.6 - 60cm
13173.9 - 90cm

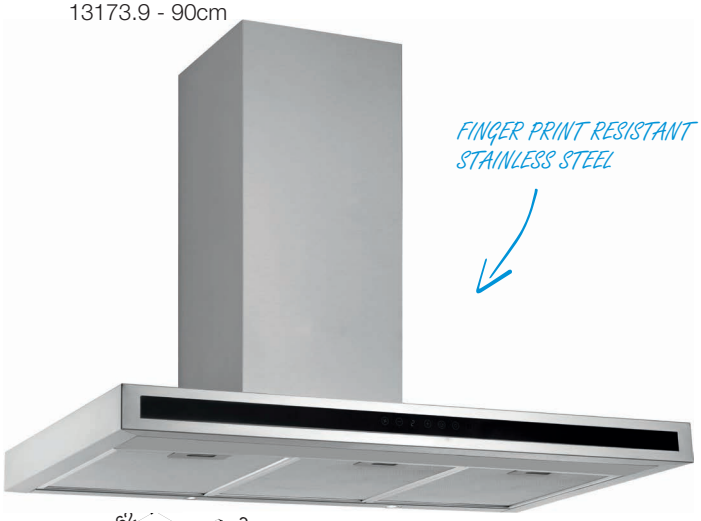

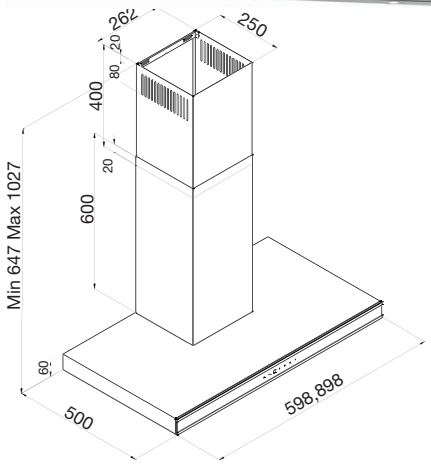

SIZE (mm)	600mm - 598W x 500D 900mm - 898W x 500D
HEIGHT (mm)	647 min - 1027 max
ELECTRICITY SUPPLY & CONNECTION	220-240v, 50Hz
CONTROLS	Soft touch screen
SPEEDS	Five
ILLUMINATION	Two 3 Watt LED
SUPPLIED	Instructions for installation, operation and maintenance, screws & brackets for mounting.
NOISE RATING	54-63 dBA
WATTAGE (W)	250W
DUCTING	150mm ducting required. Can be recirculated using charcoal filters
FEATURES	Dishwasher safe aluminium filters Cleaning indicator N-RV system Timer Function

QUIET 5 SPEED - REDUCES NOISE SIGNIFICANTLY

MODEL: IK82

COLOUR: Stainless Steel

NET CAPACITY: Up to 800m3/hr

CODE: 13155.6 - 60cm
13155.9 - 90cm

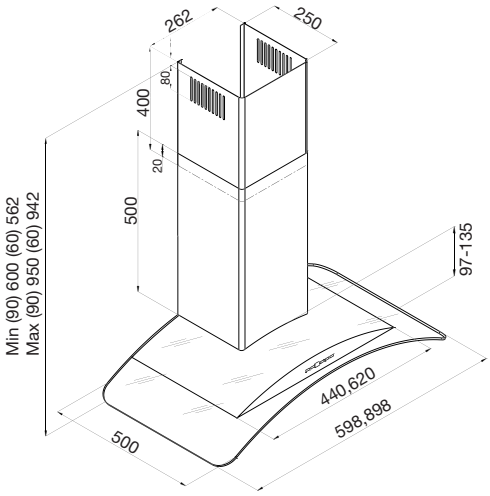

SIZE (mm)	600mm/900mm
HEIGHT (mm)	60cm - 562 min - 942 max 90cm - 600 min - 950 max
ELECTRICITY SUPPLY & CONNECTION	220-240v, 50Hz
CONTROLS	Soft touch control panel
SPEEDS	Five
ILLUMINATION	Two 3 Watt LEDs
SUPPLIED	Instructions for installation, operation and maintenance, screws & brackets for mounting.
NOISE RATING	47.4 dBA (lowest speed) 69.6 dBA (highest speed)
WATTAGE (W)	250W
DUCTING	150mm ducting required. Can be recirculated using charcoal filters
FEATURES	Tempered glass N-RV system Dishwasher safe filter Cleaning indicator Timer function

MODEL: IK65

COLOUR: Stainless Steel

NET CAPACITY: Up to 800m3/hr

CODE: 3170.9 - 90cm

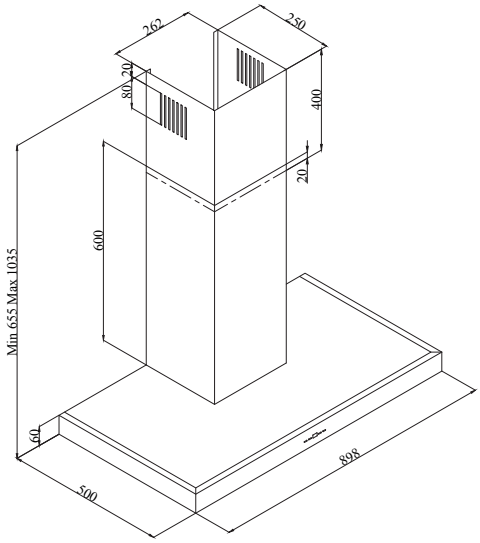

SIZE (mm)	900mm
HEIGHT (mm)	655 min - 1035 max
ELECTRICITY SUPPLY & CONNECTION	220-240v, 50Hz
CONTROLS	Soft touch screen
SPEEDS	Five
ILLUMINATION	Two 3 Watt LED
SUPPLIED	Instructions for installation, operation and maintenance, screws & brackets for mounting.
NOISE RATING	54-63 dBA
WATTAGE (W)	250W
DUCTING	150mm ducting required. Can be recirculated using charcoal filters
FEATURES	Dishwasher safe aluminium filters Cleaning indicator N-RV system Timer Function

SLIDE OUT WITH REMOTE CONTROL

MODEL: IK35

Remote Control

COLOUR: Stainless Steel & Black Glass
NET CAPACITY: Up to 500m3/hr
CODE: IK35 (60cm)

HIGH EXTRACTION FOR A SLIDE OUT. FITS INTO A 60CM CABINET

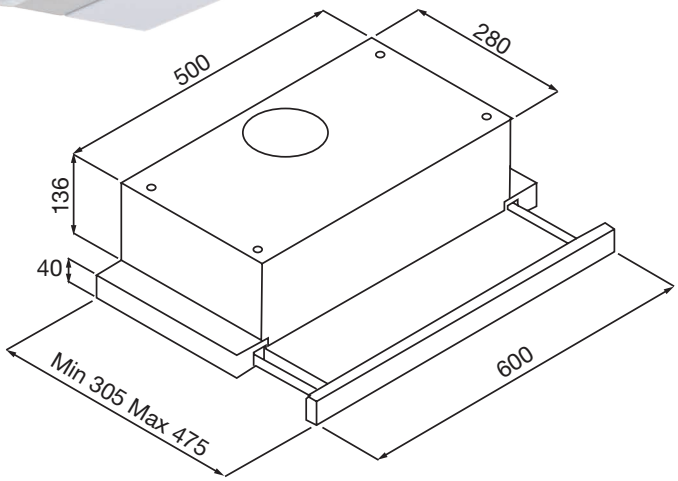

SIZE (mm)	500W x 280D x 176H
ELECTRICITY SUPPLY & CONNECTION	220-240v, 50Hz Connected Power Cord with 3 pin plug suitable for standard 10 Amp G.P.O
CONTROLS	Touch control and remote control
SPEEDS	Three
ILLUMINATION	Two 25 Watt Halogen
SUPPLIED	Instructions for installation, operation and maintenance, screws & brackets for mounting. One way butterfly valve (optional use)
NOISE RATING	<54dBA (measured at highest speed)
WATTAGE	Motor: 220 Watt Total Maximum: 270 Watts
DUCTING	125mm ducting required (not supplied). Can be recirculated using Charcoal filters.

POWER PACKS

MODEL: IK40 - 53cm
IK41 - 79cm

COLOUR: Stainless Steel

NET CAPACITY: 550m3/hr

CODE: 117065 - 53cm
117095 - 79cm

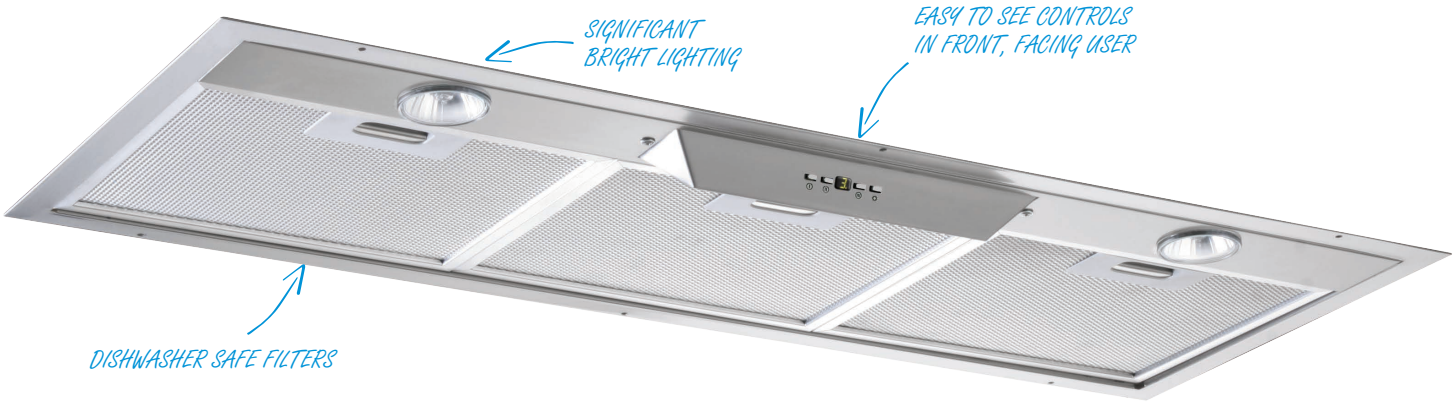

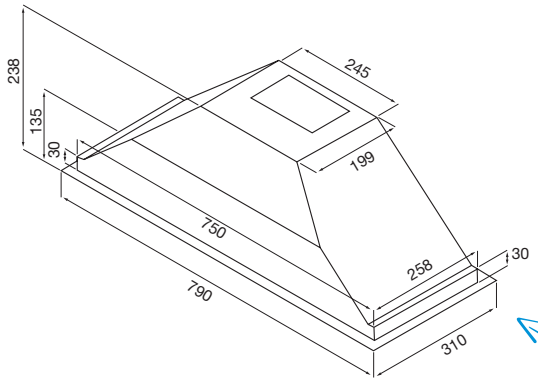

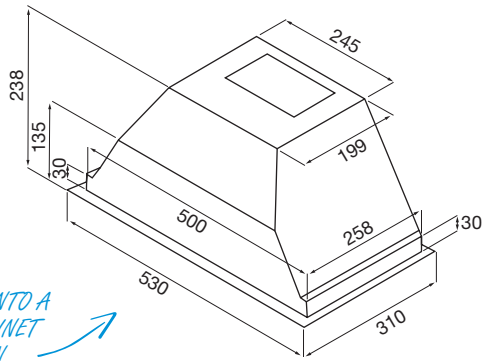

DESIGNED TO FIT INTO A 60CM OR 90CM CABINET SO THEY'RE HIDDEN

SIZE (mm)	790W x 310D x 238H 530W x 310D x 238H
ELECTRICITY SUPPLY & CONNECTION	220-240v, 50Hz. Connected Power Cord with 3 pin plug suitable for standard 10 Amp G.P.O
CONTROLS	Soft touch electronic with digital display screen
SPEEDS	Three plus seperate ON/OFF button
ILLUMINATION	Two 50 Watt 12V Halogen
SUPPLIED	Instructions for installation, operation and maintenance, screws for mounting. One way butterfly valve (optional use)
NOISE RATING	<54dBA - 59dBA
WATTAGE	Motor: 220 Watt Total Maximum: 320 Watts
DUCTING	125mm ducting required (not supplied). Can be recirculated using Charcoal filters
FEATURES	Delay timer and filter warning

MODEL: IK77
IK78

COLOUR: Stainless Steel

NET CAPACITY: Up to 750m3/hr

CODE: IK77 - 53cm
IK78 - 79cm

Remote Control

THESE MODELS ALL FIT INTO A 60CM AND 90CM CABINET

DISHWASHER SAFE HIDDEN FILTERS.

EXTRA QUIET RANGEHOODS

LED LIGHTING FOR ENERGY EFFICIENCY

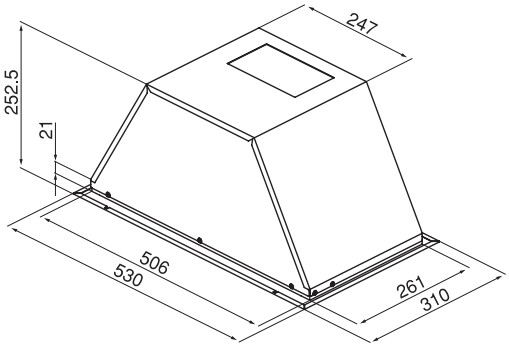

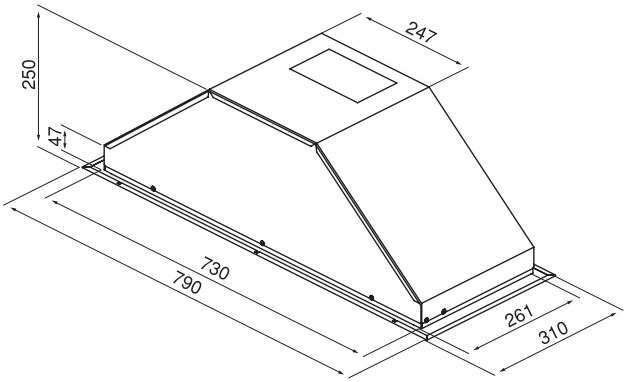

SIZE (mm)	530 mm - 530W x 310D x 252.5H 790 mm - 790W x 310D x 250H
ELECTRICITY SUPPLY & CONNECTION	220-240v, 50Hz. Connected Power Cord with 3 pin plug suitable for standard 10 Amp G.P.O.
CONTROLS	Soft touch electronic with digital display screen
SPEEDS	Five plus separate ON/OFF button
ILLUMINATION	Two 1 Watt 12V LED (53cm) Four 1 Watt 12V LED (79cm)
SUPPLIED	Instructions for installation, operation and maintenance, screws & brackets for mounting.
NOISE RATING	54dBA - 59dBA
WATTAGE (W)	Motor: 220 Watt Total Maximum: 230 Watts (53cm), 240 Watt (79cm)
DUCTING	150mm ducting required (not supplied). Can be recirculated using Charcoal filters.
FEATURES	Delay timer and filter warning Remote Control

MODEL: IK79.6
IK79.9

Remote Control

COLOUR: Stainless Steel & Black Tempered Glass

NET CAPACITY: Up to 950m3/hr

LARGE EXTRACTION

CODE: 11175 - 53cm
11177 - 79cm

ALUMINIUM FILTERS FOR EASY CLEANING HIDDEN UNDER SURFACE PANEL.

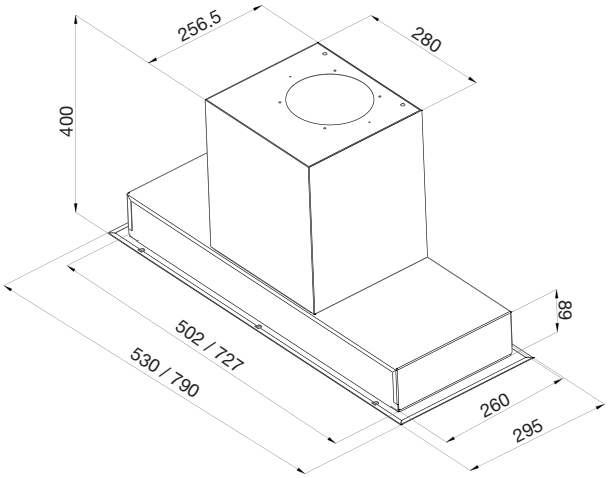

SIZE (mm)	530 mm - 530W x 295D x 400H 790 mm - 790W x 295D x 400H
ELECTRICITY SUPPLY & CONNECTION	220-240v, 50Hz.
CONTROLS	Soft touch electronic LED with digital display screen
SPEEDS	Nine
ILLUMINATION	Two 2 Watt LED - 53cm Four 3 Watt LED - 79cm
SUPPLIED	Instructions for installation, operation and maintenance, screws & brackets for mounting.
NOISE RATING	54-59dBA
WATTAGE (W)	224W/232W
DUCTING	150mm ducting required (not supplied). Can be recirculated using charcoal filters (YM974.1175.03)
FEATURES	EBM motor Remote control Black tempered glass Display screen Cleaning induction Split extraction N-RV system Dishwasher safe aluminium filters

NINE SPEEDS!

REMOTE MOTORED POWER PACKS

Remote Control

External motor required

IK73 - 53cm
IK74 - 79cm

COLOUR: Stainless Steel
SIZE: 53cm (IK73). To fit 60cm cabinet
SIZE: 79cm (IK74). To fit 90cm cabinet

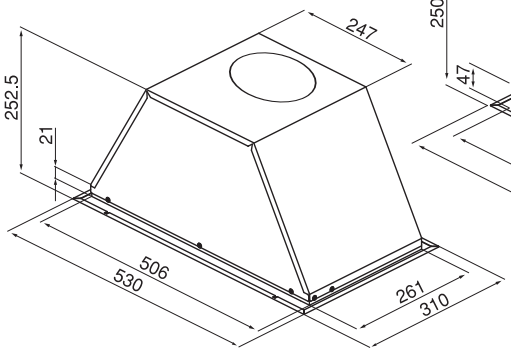

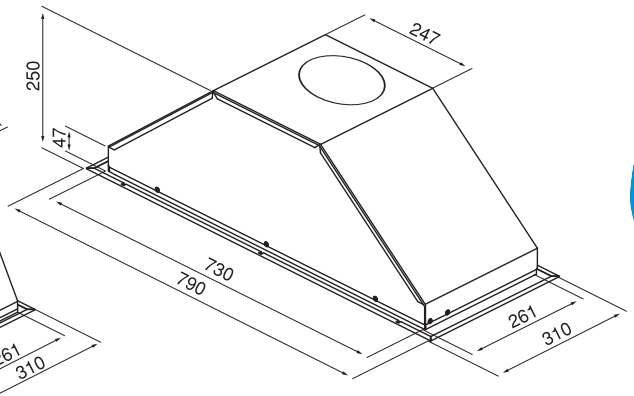

THE SILENCE WILL SPEAK VOLUMES!

SIZE (mm)	600mm - 530W x 310D x 252.5H 900mm - 790W x 310D x 250H
ELECTRICITY SUPPLY & CONNECTION	220-240v, 50Hz. Connected Power Cord with 3 pin plug suitable for standard 10 Amp G.P.O.
CONTROLS	Soft touch electronic with digital display screen
SPEEDS	Five plus separate ON/OFF button
ILLUMINATION	Two 5 Watt 12V LED (60cm) Four 5 Watt 12V LED Lights (90cm)
SUPPLIED	Instructions for installation, operation and maintenance, screws & brackets for mounting.
FEATURES	Delay timer and filter warning Remote Control

WE RECOMMEND THE IK15 REMOTE MOTOR:

EXTRACTION	Up to 750m3/hr
SIZE (mm)	280W x 310D x 280H
INSTALLATION	Roof cavity
NOISE RATING	42 (on lowest speed) 67 (on highest speed)
FEATURES	Single motor, 150mm outlet

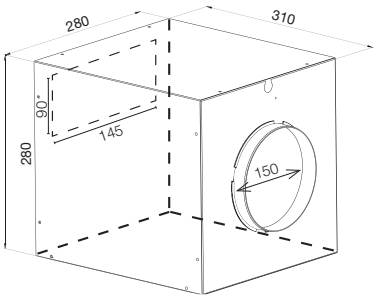

See back of brochure for more information on remote motors.

MODEL: IK53 & IK56

Remote Control

COLOUR: Stainless Steel & Black Glass Downdraft
NET CAPACITY: Up to 900m3/hr
CODE: (IK53) 341050 - 50cm
(IK56) 341080 - 80cm

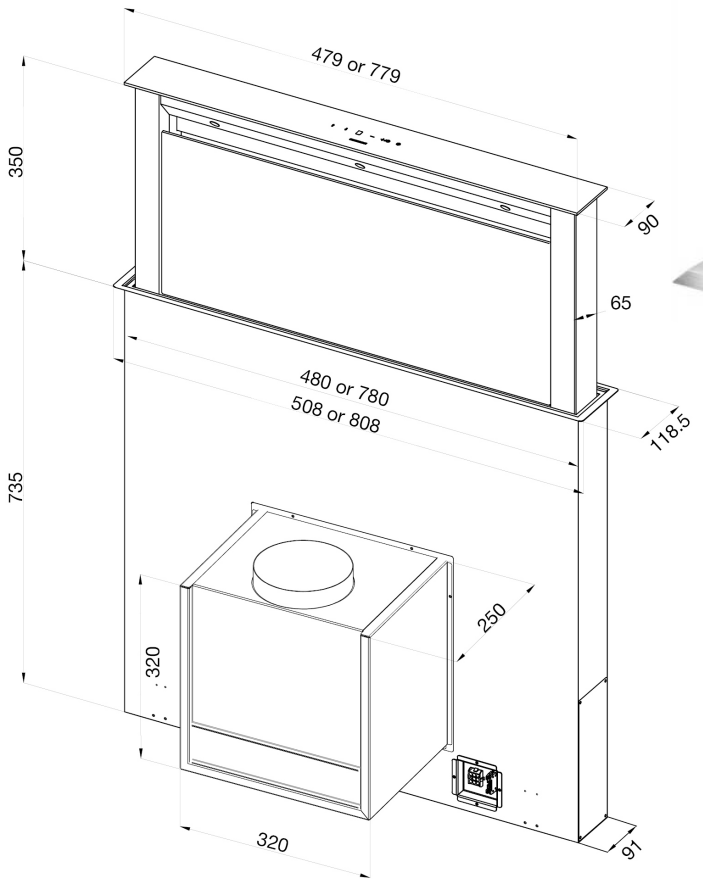

SIZE (mm)	500mm/800mm
ELECTRICITY SUPPLY & CONNECTION	220-240v, 50Hz
CONTROLS	Touch screen & remote control
SPEEDS	Four
ILLUMINATION	IK53 - 2x 1.1 watt LED. IK56 - 2x 1.1 watt LED
SUPPLIED	Instructions for installation, operation and maintenance, screws & brackets for mounting.
WATTAGE (W)	250W
DUCTING	150mm ducting required (not supplied)
FEATURES	Stainless steel Aluminium cassette filters (dishwasher safe) Cleaning indicator Timer function

MODEL: IK62

COLOUR: Stainless Steel & Black Glass Downdraft
NET CAPACITY: Up to 900m3/hr
CODE: (IK62) 341185 - 85cm

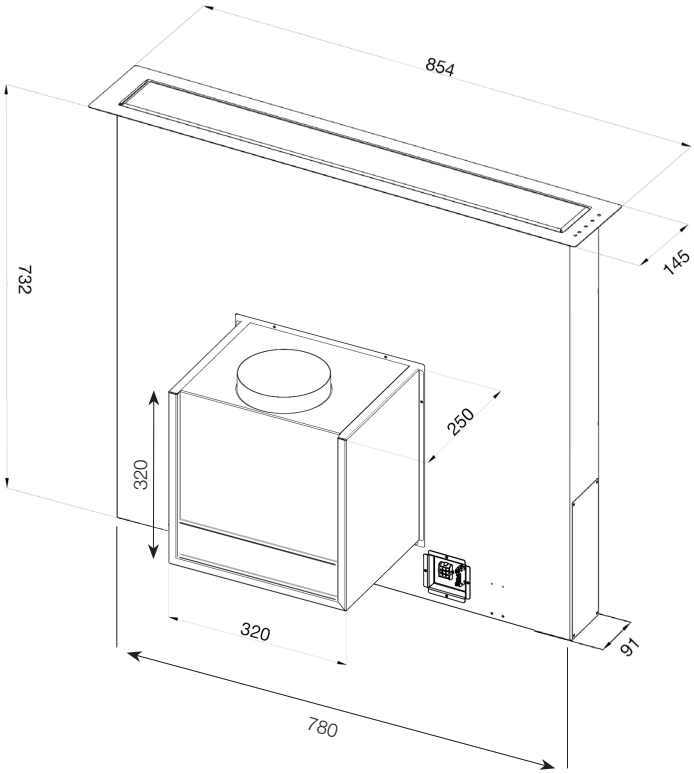

SIZE (mm)	850mm
ELECTRICITY SUPPLY & CONNECTION	220-240v, 50Hz
CONTROLS	LED screen & remote control
SPEEDS	Four
ILLUMINATION	
SUPPLIED	Instructions for installation, operation and maintenance, screws & brackets for mounting.
WATTAGE (W)	250W
DUCTING	150mm ducting required (not supplied)
FEATURES	Stainless steel Aluminium cassette filters (dishwasher safe) Cleaning indicator Timer function

DOWN DRAFTS - REMOTE MOTORS REQUIRED

MODEL: IK54, IK57 & IK60

External motor required

Remote Control

COLOUR: Stainless Steel & Black Glass Downdraft

CODE: (IK54) 341050WM - 50cm
(IK57) 341080WM - 80cm
(IK60) 34110WM - 110cm

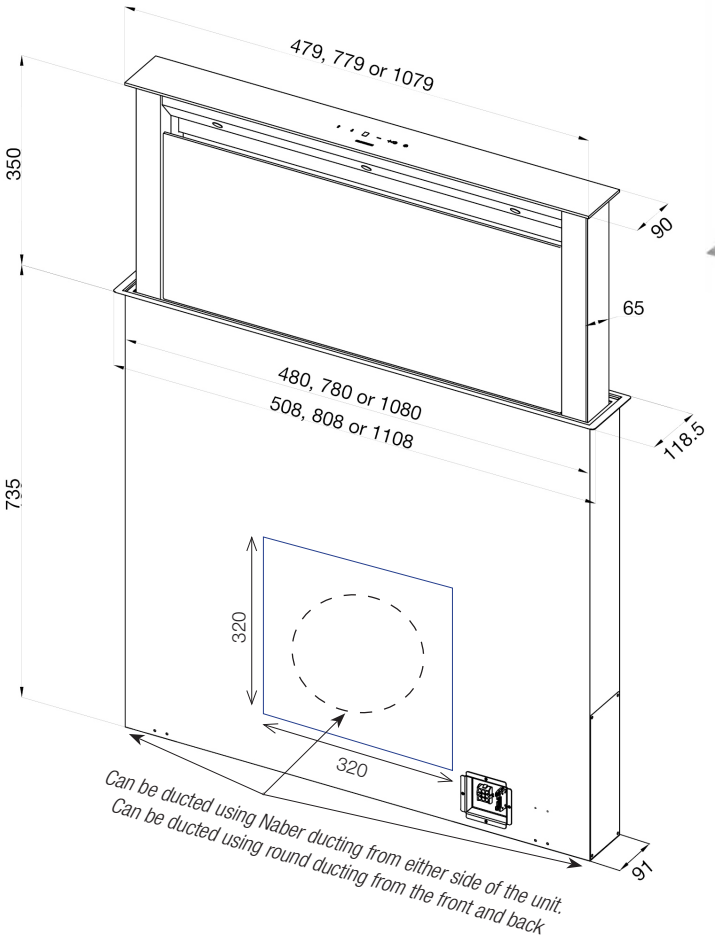

SIZE (mm)	500mm/800mm/1100mm
ELECTRICITY SUPPLY & CONNECTION	220-240v, 50Hz
CONTROLS	Touch screen & remote control
SPEEDS	Four
ILLUMINATION	IK54 - 2x 1.1 watt LED. IK57 - 2x 1.1 watt LED
SUPPLIED	Instructions for installation, operation and maintenance, screws & brackets for mounting.
WATTAGE (W)	Varies depending on remote motor selected
DUCTING	150mm ducting required (not supplied)
FEATURES	Stainless steel Aluminium cassette filters (dishwasher safe) Cleaning indicator Timer function

WE RECOMMEND THE IK16 REMOTE MOTOR:

SIZE (mm)	266W x 521D x 335.5H
DUCTING	150mm ducting (out) and 200mm (in) required (not supplied) or 150mm with reducer
INSTALLATION	Roof cavity
NOISE RATING	42 (on lowest speed) 67 (on highest speed)
FEATURES	Two motors

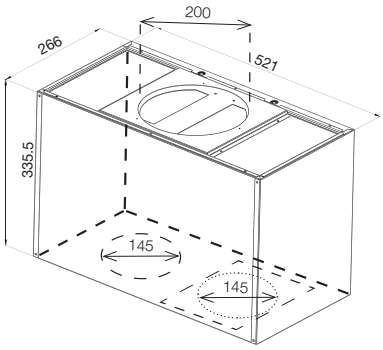

See back of brochure for more information on remote motors.

MODEL: IK63

COLOUR: Stainless Steel & Black Glass Downdraft
CODE: (IK63) 341185WM - 85cm

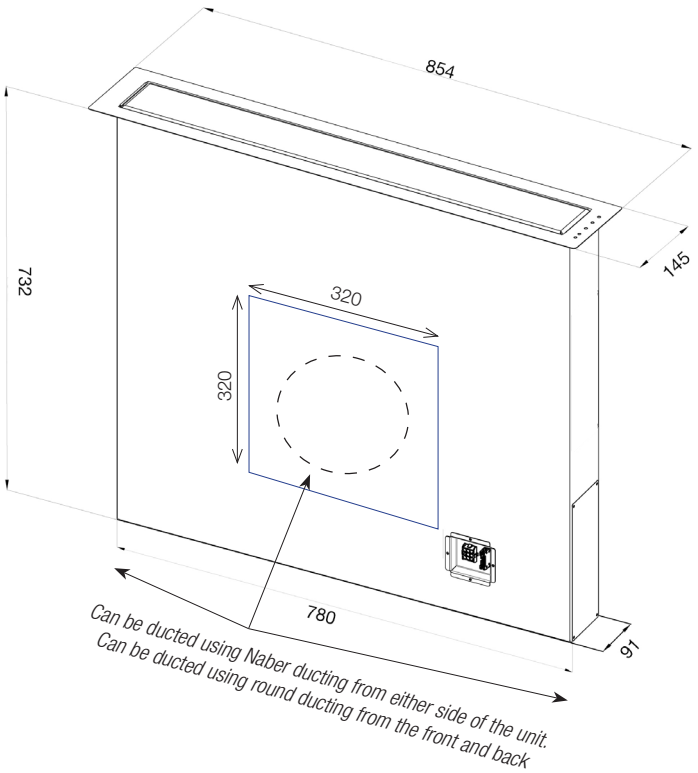

SIZE (mm)	850mm
ELECTRICITY SUPPLY & CONNECTION	220-240v, 50Hz
CONTROLS	LED screen & remote control
SPEEDS	Four
ILLUMINATION	
SUPPLIED	Instructions for installation, operation and maintenance, screws & brackets for mounting.
WATTAGE (W)	Varies depending on remote motor selected
DUCTING	150mm ducting required (not supplied)
FEATURES	Stainless steel Aluminium cassette filters (dishwasher safe) Cleaning indicator Timer function

WE RECOMMEND THE IK16 REMOTE MOTOR FOR ALL CEILING RANGEHOODS AND LARGER DOWNDRAFTS:

SIZE (mm)	266W x 521D x 335.5H
DUCTING	150mm ducting (out) and 200mm (in) required (not supplied) or 150mm with reducer
INSTALLATION	Roof cavity
NOISE RATING	42 (on lowest speed) 67 (on highest speed)
FEATURES	Two motors

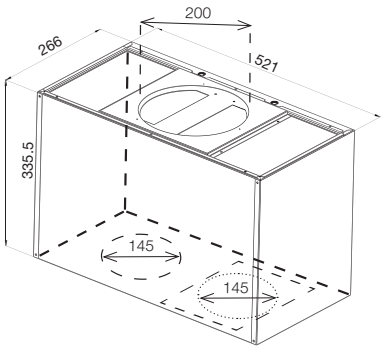

See back of brochure for more information on remote motors.

MODEL: IK21

Remote Control

COLOUR: Stainless Steel
NET CAPACITY: Up to 850m3/hr
CODE: 14225

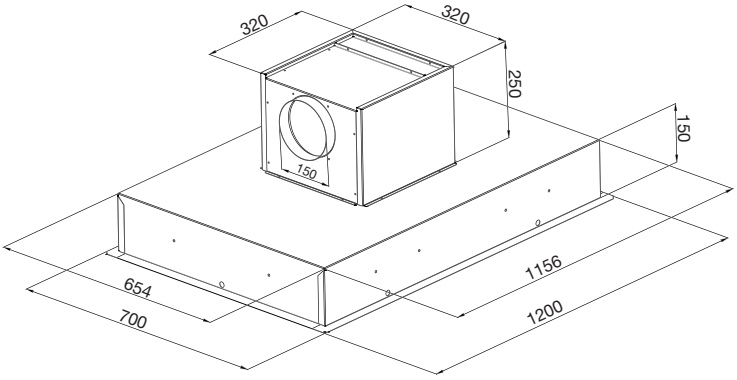

SIZE (mm)	1200mm
HEIGHT (mm)	400mm
ELECTRICITY SUPPLY & CONNECTION	220-240v, 50Hz
CONTROLS	LED screen
SPEEDS	Four
ILLUMINATION	Six 3 Watt LEDs
SUPPLIED	Instructions for installation, operation and maintenance, screws & brackets for mounting.
NOISE RATING	41 dBA (lowest speed) 57 dBA (highest speed)
DUCTING	150mm ducting required (not supplied)
FEATURES	Remote control N-RV system Dishwasher safe aluminium filter Timer function

MOTOR INCLUDED WITH THIS MODEL

MODEL: IK20B (black)
IK20W (white)

Remote Control

External motor required

CODE: 14223B - black tempered glass
14223W - white tempered glass

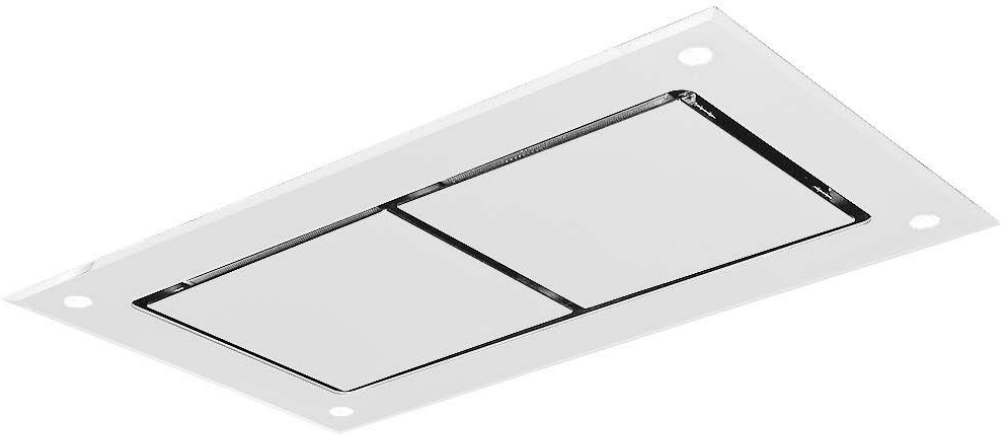

THESE UNITS CAN ACHIEVE HIGH STUD HEIGHT EXTRACTION

DISHWASHER SAFE FILTERS HIDDEN BEHIND GLASS PANELS

SIZE (mm)	1200mm
HEIGHT (mm)	180mm
ELECTRICITY SUPPLY & CONNECTION	220-240v, 50Hz
CONTROLS	LED Indicators
ILLUMINATION	Four 3 Watt LEDs
SUPPLIED	Instructions for installation, operation and maintenance, screws & brackets for mounting.
NOISE RATING	Remote motor
DUCTING	150mm ducting required (not supplied)
FEATURES	Remote control Remote motor Split extraction Dishwasher safe aluminium filter

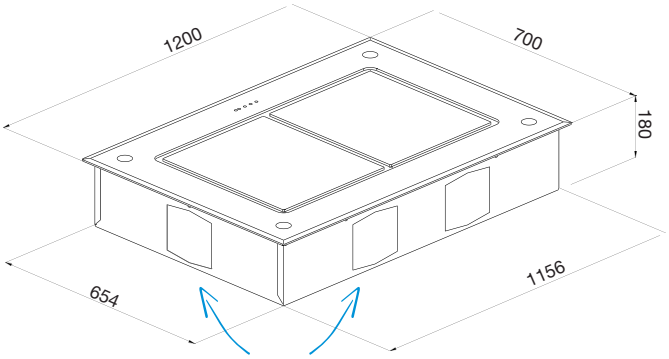

SPLIT EXTRACTION FOR DIFFERENT EXTRACTION OPTIONS

See back of brochure for more information on remote motors.

MODEL: IK22B (black)
IK22W (white)

Remote Control

External motor required

COLOUR: Stainless Steel & Tempered Glass

CODE: 14227B - black tempered glass
14227W - white tempered glass

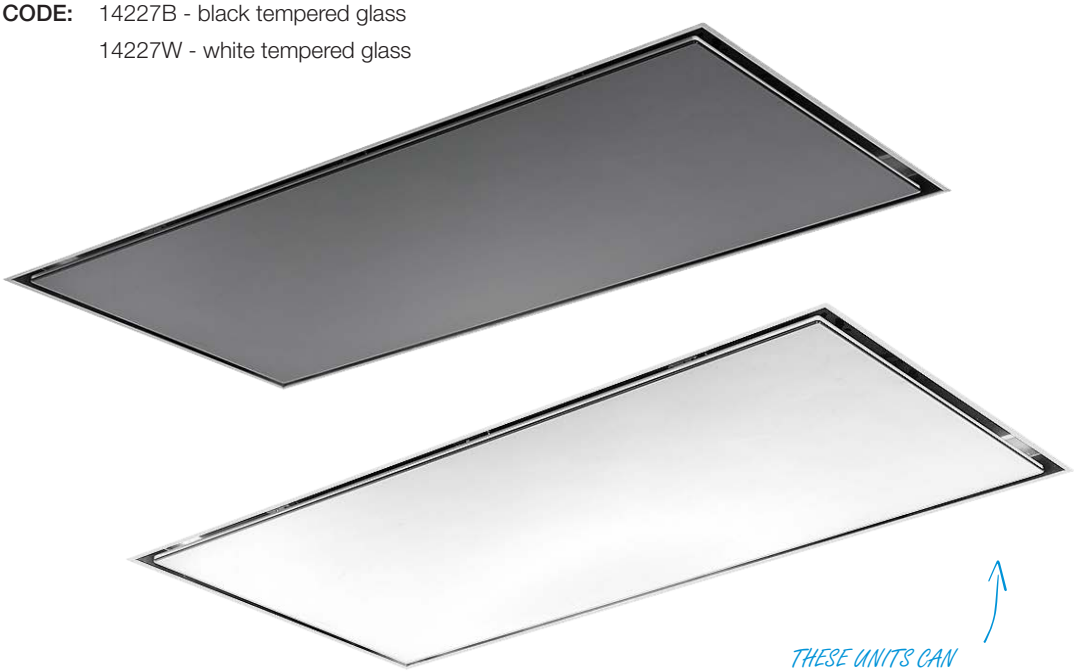

THESE UNITS CAN ACHIEVE HIGH STUD HEIGHT EXTRACTION

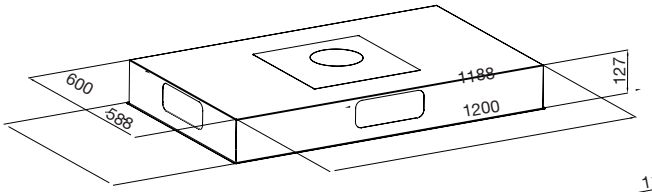

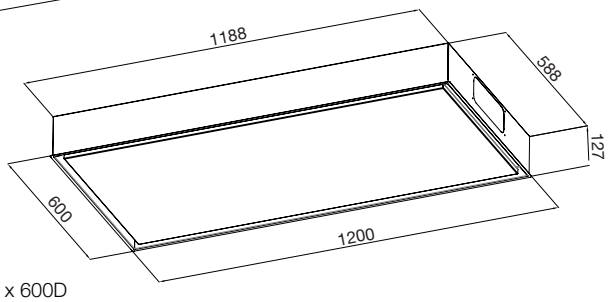

SIZE (mm)	1200mm - 1200W x 600D
HEIGHT (mm)	127mm
ELECTRICITY SUPPLY & CONNECTION	220-240v, 50Hz
CONTROLS	LED Indicators
SUPPLIED	Instructions for installation, operation and maintenance, screws & brackets for mounting.
FEATURES	Remote control Timer function Dishwasher safe aluminium cassette filters Split extraction

reddot design award

See back of brochure for more information on remote motors.

REMOTE MOTORS

MODEL: IK15

COLOUR: Metal

CAPACITY: Up to 750m3/hr

CODE: 11240

SIZE (mm)	280W x 310D x 280H
DUCTING	150mm ducting required (not supplied)
INSTALLATION	Roof cavity
NOISE RATING	34.5 (on lowest speed) 58.9 (on highest speed)
FEATURES	Single motor, 150mm outlet

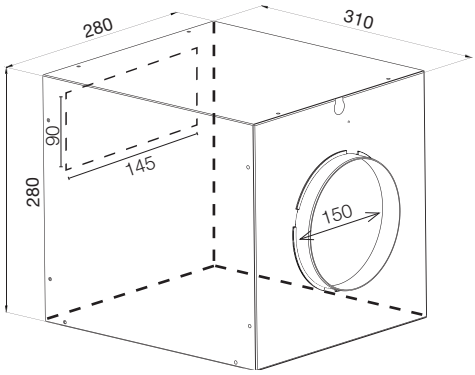

MODEL: IK16

COLOUR: Metal

CAPACITY: Up to 1400m3/hr

CODE: 11250

SIZE (mm)	266W x 521D x 335.5H
DUCTING	150mm ducting (out) and 200mm (in) required (not supplied) or 150mm with reducer
INSTALLATION	Roof cavity
NOISE RATING	42 (on lowest speed) 67 (on highest speed)
FEATURES	Two motors

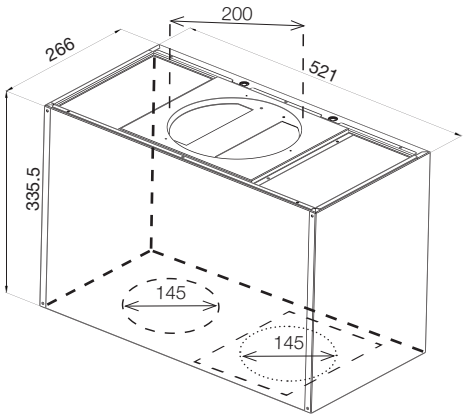

TWO QUESTIONS WE GET ASKED A LOT:

Are your Rangehoods noisy?

Do they extract a lot?

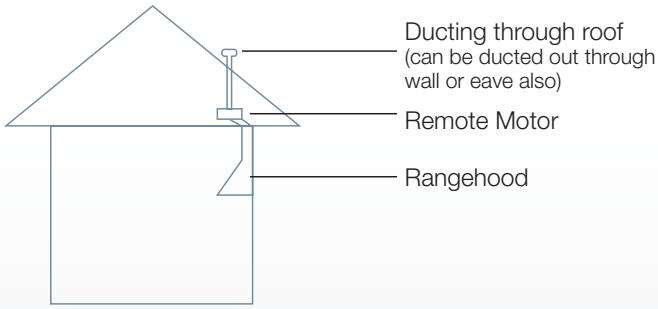

OUR ANSWER:

The only way your Rangehood can be silent is to have a remote motor. The noise of a Rangehood comes from the motor located just inside your Rangehood. The higher the extraction, the noisier your Rangehood will be unless you remove your motor from its Rangehood body and place it somewhere else in the house.

Remote motors allow your Rangehood to be customised, generally placing it into the ceiling. These motors need to be compatible to the Rangehood.

DUCTING KITS

125mm, 150mm & 200mm Ducting Options

RHK125T, RHK150T, RHK200T
DUCTING KIT FOR ROOF

Ducting kit for roof. 125mm, 150mm or 200mm (includes 3m of semi-rigid ducting, 2 clips and outlet)

RHK125E, RHK150E, RHK200E
DUCTING KIT FOR EAVE

Ducting kit for eave. 125mm, 150mm or 200mm (includes 3m of semi-rigid ducting, 2 clips and outlet)

RHK125W, RHK150W, RHK200W
DUCTING KIT FOR WALL

Ducting kit for wall. 125mm, 150mm or 200mm (includes 3m of semi-rigid ducting, 2 clips and outlet)

NABER DUCTING

For better results in extraction and reducing noise

Hose clip for 150mm round pipe

Code: N402.1.133

End view

Vent Louvred SS for round 150mm

Code: N402.2.012

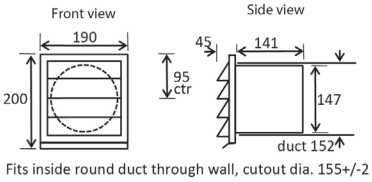

Vent Louvred SS for flow 150mm

Code: N402.2.038

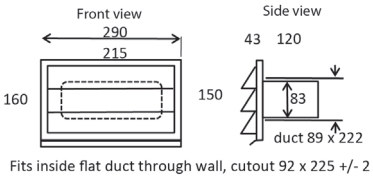

Flow 150 flat duct pipe 1000mm

Code: N404.3.001

End view

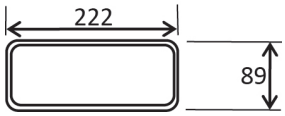

CONTINUED ON NEXT PAGE...

NABER DUCTING (CONTINUED)

Flow 150 deflector 90° (bend round to flat) Code: N404.3.002

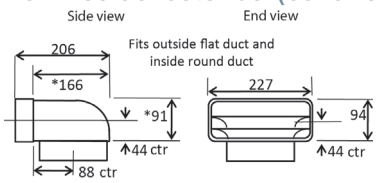

Silencer aluminium 150 round Code: N404.3.029

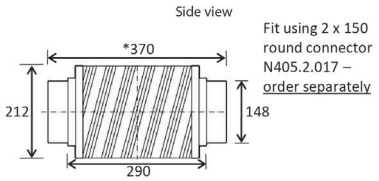

Flow 150 flat pipe horizontal 90° Code: N404.3.003

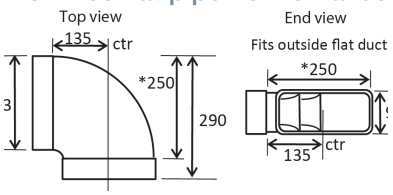

Wall plate flow 150 flat duct Code: N404.3.058

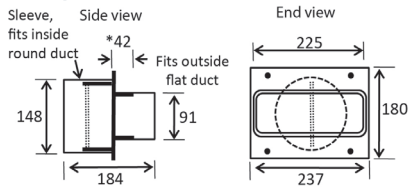

Flow 150 flat pipe bend vertical 90° Code: N404.3.004

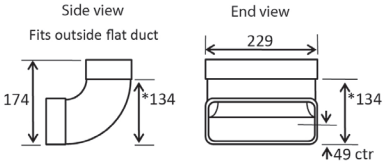

Vent louvred 150mm white round Code: N404.4.044

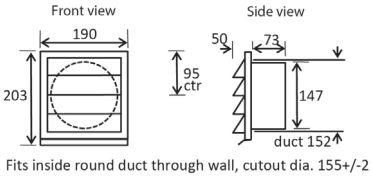

Flow 150 flat pipe connector Code: N404.3.005

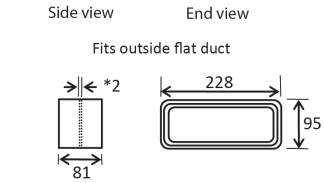

Vent louvred 150mm brown round Code: N404.4.045

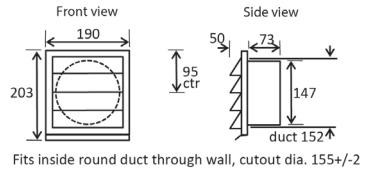

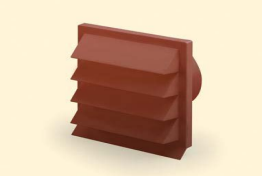

Flow 150 flat to round connector Code: N404.3.006

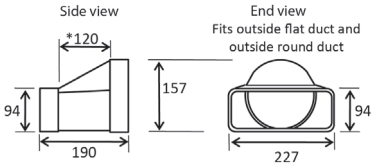

Flow round 150 pipe and hose connector Code: N405.2.017

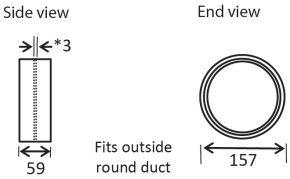

Flow 150 flat pipe bend horizontal 15° Code: N404.3.007

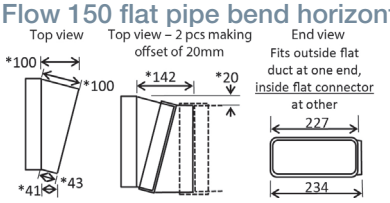

Flow 1250 pipe round 1000mm long Code: N405.2.102

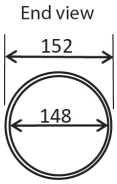

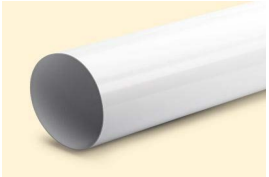

Flow 150 flat duct mounting bracket Code: N404.3.019

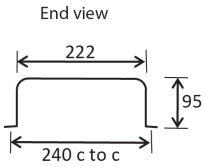

Flow round 150 Pipe Bend 90 degrees Code: N405.2.015

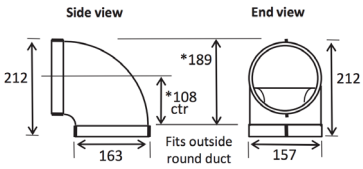

For more information about these ducting accessories, please visit our website

GENERAL INFORMATION

APPLICATION:
Designed for wall or island mounting above a cooktop, the Ikon range, two part telescopic flue is perfect for kitchens with heights to 2.4m. Small increments greater than 2.4m heights can be gained by increasing the bench height and / or the gap between the underside of the hood and the benchtop.

PERFORMANCE:
With a high air extraction the more vigorous styles of cooking such as pasta boiling, griddle, and stir frying are catered for. A single touch of the speed control will reduce the power to suit the gentlest of simmers.

LOW MAINTENANCE:
Easy cleaning is a premium with wipe over 18/10 stainless steel. The three lift-out aluminium four ply grease filters are even dishwasher safe. The lighting and controls are positioned away from most of the vapour trail.

QUIETNESS:
The motor/impellor encasement and internal flue are smooth walled to eliminate air drag and noise, hand finished welded metal joins for no vibration.

DUCTING:
Extracting the air direct to atmosphere ensures the maximum removal of grease/oil/particle laden vapour, odours and very importantly, the heat resulting in a cleaner, more comfortable cooking environment.

An internal ducting pipe could, ideally, continue in a straight line within the decorative flue to the kitchen ceiling then through the roof cavity and exit via a roof cowl.

DUCTING MATERIAL:
The smooth internal wall of either galvanised sheetmetal piping or high temperature resistant PVC will assist in both greater unobstructed air flow and a quieter operation. Flexible ducting can be considered for the very short run and difficult obtuse bends.

WARRANTY:
Two years parts and labour - further details to right.

WARNING:
Technical specifications and product sizes can be varied by the manufacturer - without notice. Size for appliance installation should only be by physical product measurements. The supplied information is indicative only.

WARRANTY

IKON Commercial Limited (IKON), as a NZ importer, hereby warrants (subject to the exclusions and conditions set out below) to the consumer (the consumer)of the brands of electrical appliances supplied directly or indirectly by or from IKON that the product (the Product) shall be free from manufacturing defects in materials or workmanship for a period of 2 years (24 months) from the date of original purchase of the Product from IKON or from the retailer (as the case may be).

Subject to the below mentioned exclusion and conditions, the obligations of IKON under this warranty shall be limited to either of the following (at IKON's sole option):

1. To without charge repair or replace the defective Product(or the defective parts there of) and to reinstall the repaired or replaced product (or to pay reasonable costs of installation):

or

2. To refund the Consumer the original purchase price for the defective Products:

AND such repair, replacement or refund shall constitute fulfilment of all of IKON's obligations under this warranty. To the extent permitted by law IKON will not whether by virtue of this warranty or otherwise be liable for and hereby disclaim any liability for any incidental, economic or consequential loss, expenditure or damage, directly or indirectly suffered by the Consumer or any other person in respect to any defect in the Product.

This warranty does not apply if:

1. The Product has been installed, used or cared for in any improper manner or otherwise contrary to any specifications, instructions or recommendations contained in any brochure or materials supplied on the original purchase of the product.
2. Any attempt is made to repair or modify the product in any way by any person without written authority of IKON.
3. Installation of the Product has occurred without regard to the installation instruction provided and full consideration is given to all regulatory codes covering electrical, gas and plumbing installations.
4. That this warranty does not extend to:

a) optional glass lids for hobs apart from claims which relate to mechanical or physical damages thereof at the date of purchase;

b) light globes of any ages;

c) damage to the ceramic glass caused by liquid or solid spillover, lack of maintenance or impact;

d) damage to surface coatings caused by cleaning or maintenance using products not recommended by the owners handbook;

e) defects caused by normal wear and tear, accident, negligence, alteration or misuse;

f) The Product is not in the possession of the original Consumer;

g) The Product has been dismantled, repaired or serviced by other than an authorised IKON service person.

5. A claim under this warranty is not notified in writing to IKON within a reasonable period after the defect in the Product would have become apparent to a reasonable person.

Any claim under this warranty must be made in writing to IKON (at P.O.BOX 15158, Dinsdale) and must be supported by reasonable evidence of the date of original purchase of the Product and suspected defects in the Product must be made available for inspection by IKON or it's authorised representatives.

Nothing in this Product warranty shall override or negative any statutory right or remedy that may be available to the Consumer under the Consumer Guarantees Act 1993, except where the Consumer has acquired Product for the purposes of business or commercial use.

Disclaimer

IKON Commercial Limited, is constantly seeking ways to improve the specifications, design and production of the Product. Alterations take place continually. Whilst every effort is made to produce up to date literature, brochures should not be regarded as an infallible guide to the current specifications, nor does it constitute an offer for the sale of any particular Product.

Product cutouts indicated in our literature are indicative only. Actual examples of the Product only should only be used to define cutout sizes. Distributors, agents and retailers have no authority to bind IKON by any express or implied undertaking or representation.

Available from:

VERSION ONE 2018

12-14 Charlies Way, Frankton, Hamilton, New Zealand, 3204
Phone 0800 83 83 84 Fax 0800 83 83 85
Website www.ikon.nz

KITCHEN/LAUNDRY SINKS

BATHROOM BASINS

TAPWARE

RANGEHOODS

COOKTOPS

WASTE DISPOSALS